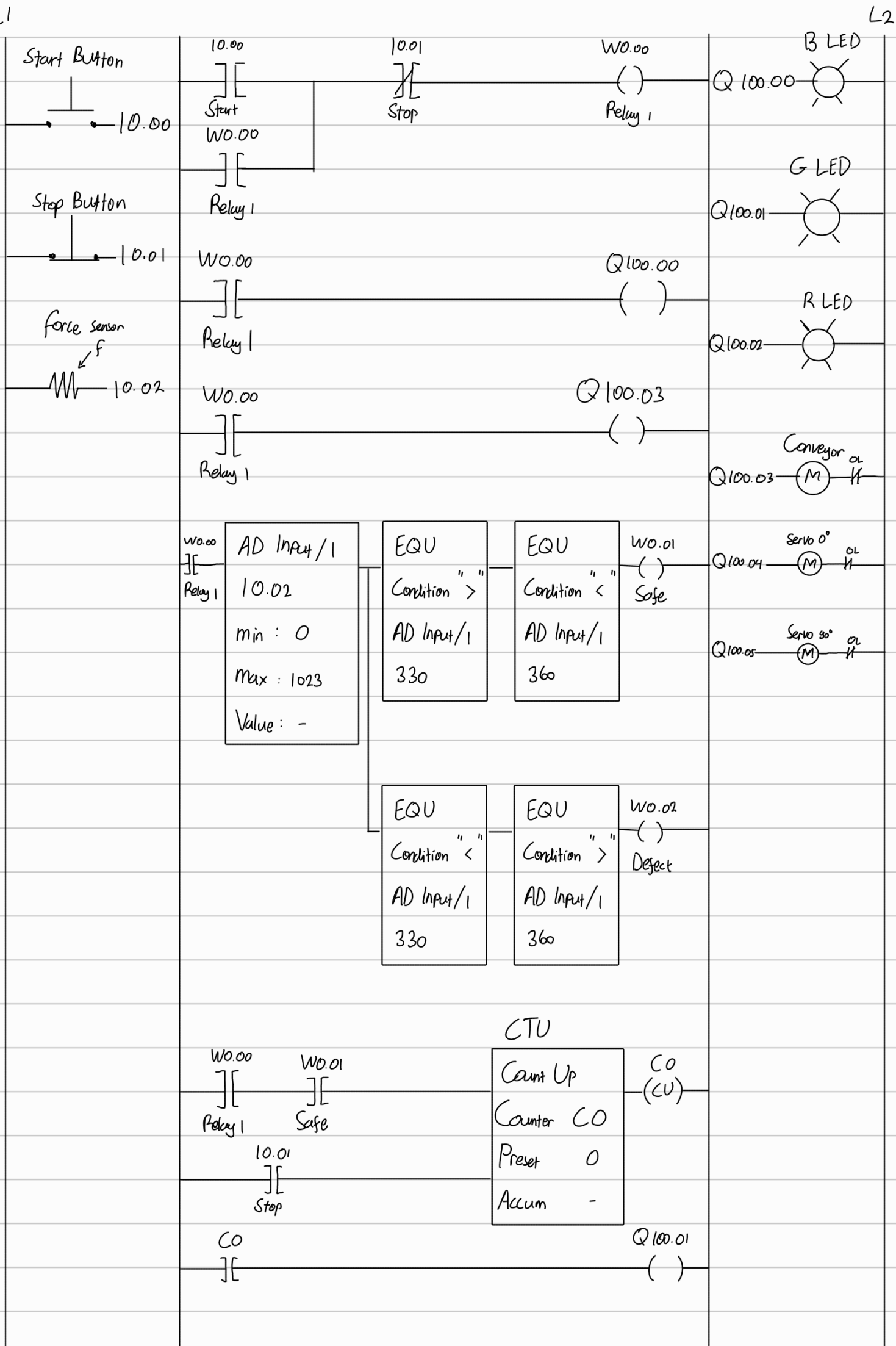
L1
L2
Start Button
I0.00
Stop Button
I0.01
Force sensor
F
I0.02
I0.00
Start
W0.00
Relay 1
I0.01
Stop
W0.00
Relay 1
B LED
Q100.00
G LED
Q100.01
W0.00
Relay 1
Q100.00
R LED
Q100.02
W0.00
Relay 1
Q100.03
Conveyor
OL
Q100.03
W0.00
Relay 1
AD Input/1
I0.02
min : 0
max : 1023
Value : -
EQU
Condition ">"
AD Input/1
330
EQU
Condition "<"
AD Input/1
360
W0.01
Safe
Q100.04
Servo 0°
OL
Q100.05
Servo 90°
OL
EQU
Condition "<"
AD Input/1
330
EQU
Condition ">"
AD Input/1
360
W0.02
Defect
CTU
W0.00
Relay 1
W0.01
Safe
I0.01
Stop
Count Up
Counter C0
Preset 0
Accum -
C0
(CU)
C0
Q100.01

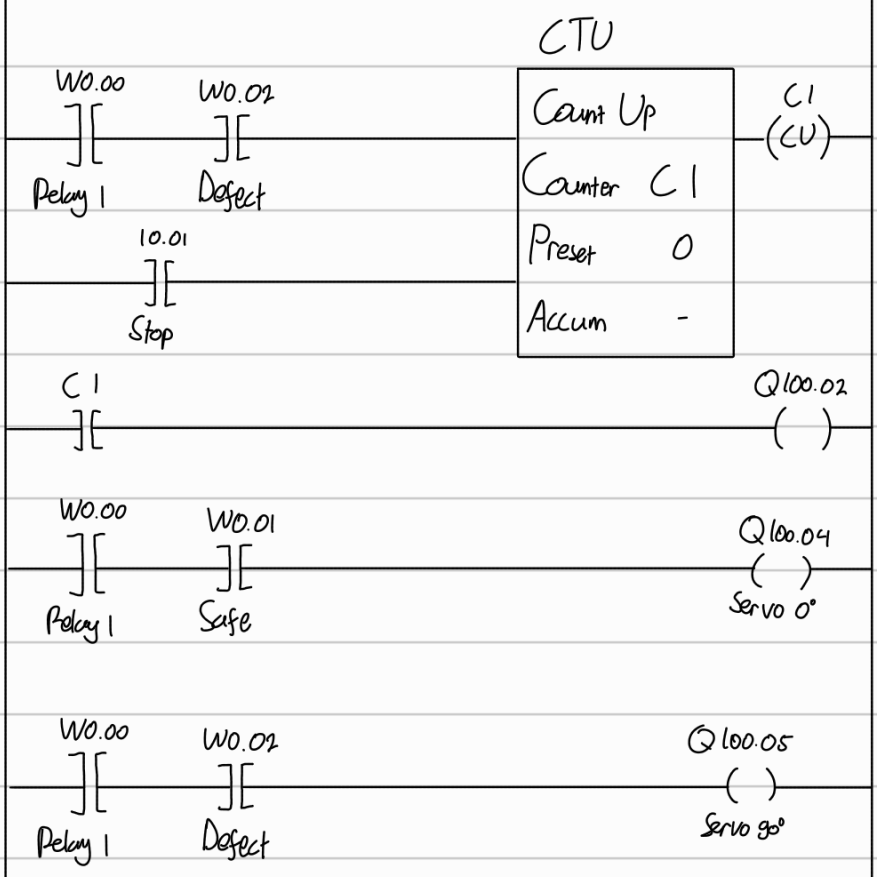
CTU
W0.00
Relay 1
W0.02
Defect
10.01
Stop
Count Up
Counter C1
Preset 0
Accum -
C1
(CU)
C1
Q100.02
W0.00
Relay 1
W0.01
Safe
Q100.04
Servo 0°
W0.00
Relay 1
W0.02
Defect
Q100.05
Servo 90°